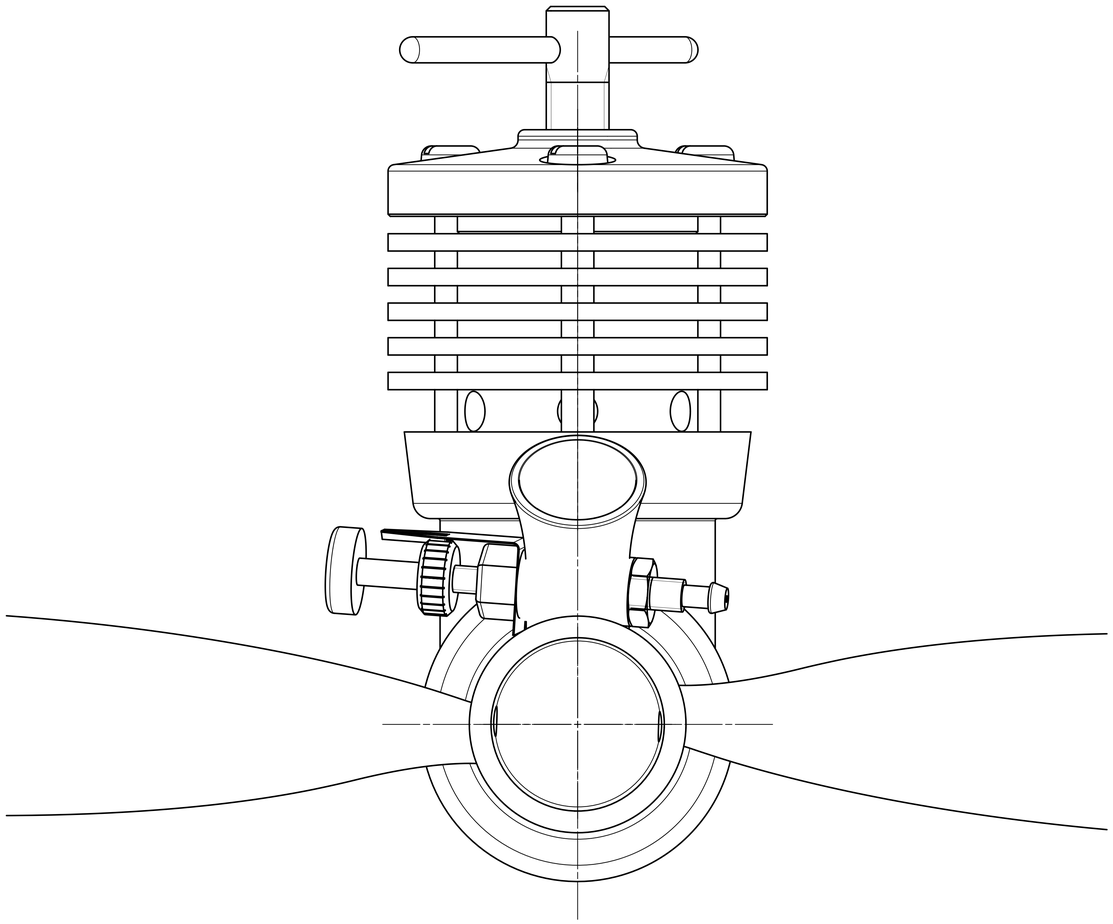

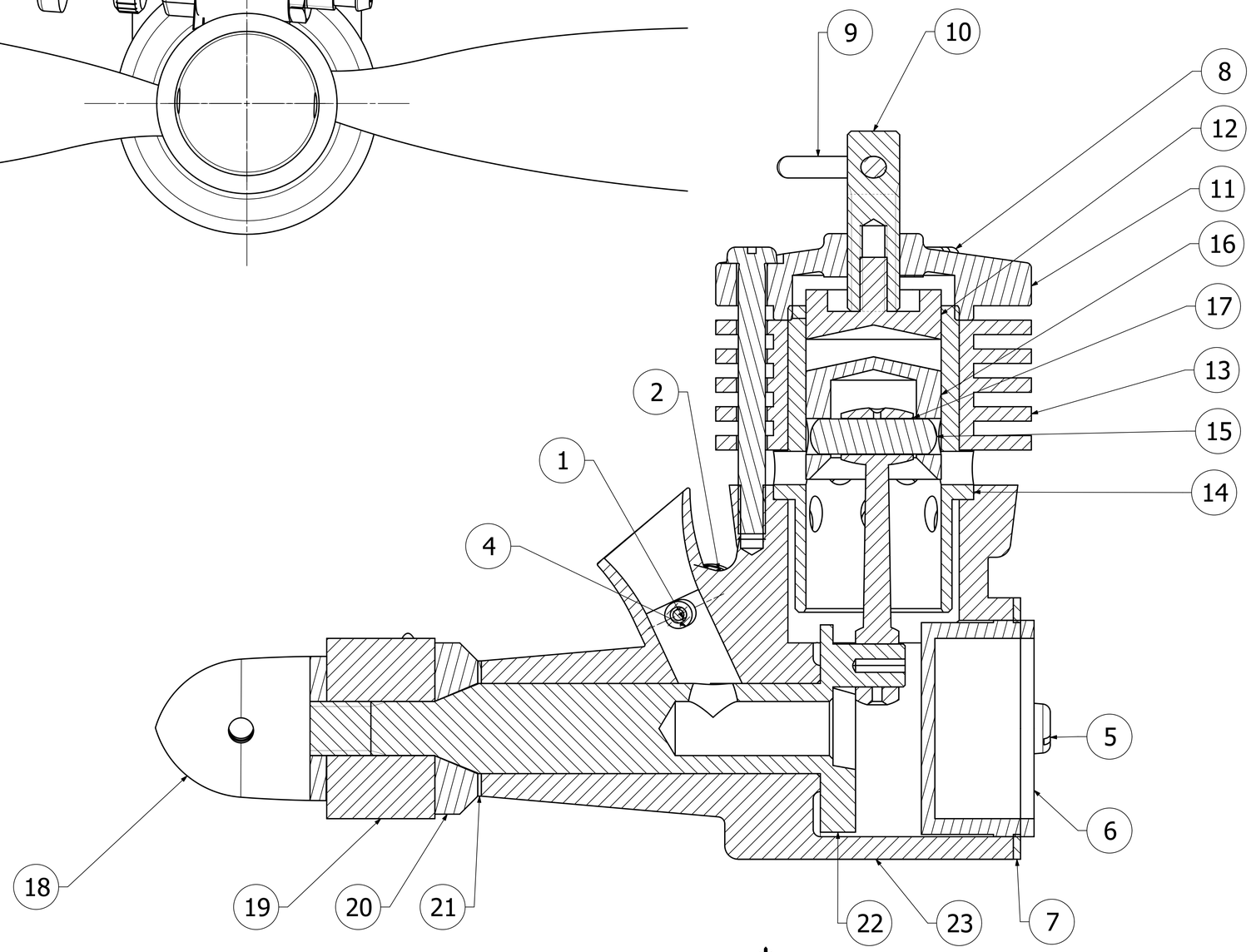


| Pos Nr | Benennung | Anzahl | Gewicht (g) | Werkstoff |
|---|---|---|---|---|
| 23 | GEHAEUSE_MODEL | 1 | 93,2 | Titanium_Ti-6Al-4V |
| 22 | KURBELWELLE | 1 | 19,4 | Titanium-Annealed |
| 21 | ANLAUFSCHEIBE | 1 | 0,3 | Bronze |
| 20 | PROP_MITNEHMER | 1 | 7,8 | Steel |
| 19 | PROPELLER_MODEL | 1 | 8,9 | Polyethylene |
| 18 | SPINNRRMUTTER | 1 | | Aluminum_2014 |
| 17 | PLEUEL | 1 | 4,6 | Steel |
| 16 | KOLBEN | 1 | 3,5 | Aluminum_2014 |
| 15 | KOLBENBOLZEN | 1 | 0,7 | Titanium_Alloy |
| 14 | LAUFBUCHSE | 1 | | Titanium_Alloy |
| 13 | KUEHLRIPPENNN | 1 | 15,6 | Aluminum_5086 |
| 12 | GEGENKOLBEN | 1 | | Aluminum_6061 |
| 11 | ZYLINDERKOPF | 1 | 12,5 | Aluminum_2014 |
| 10 | EINSTELLSCHRAUBE | 1 | | Steel |
| 9 | ENSTELLHEBEL | 1 | 1,1 | Steel |
| 8 | SCHLITZSCHRAUBE ISO 1580 M3X30_CATPART | 3 | 1,9 | Steel |
| 7 | DICHTUNG | 1 | 1,7 | Brass |
| 6 | GEHAEUSEDECKEL | 1 | 16,7 | Steel |
| 5 | SCHLITZSCHRAUBE ISO 1580 M3X6_CATPART | 2 | 0,6 | Steel |
| 4 | DUESE | 1 | 1,1 | Titanium_Alloy |
| 3 | SECHSKANTMUTTER ISO 4035 M3_CATPART | 1 | 0,3 | Bronze |
| 2 | FEDER | 1 | 0,1 | Steel |
| 1 | DÜSENNADEL | 1 | 2,7 | Bronze |

ALL DIMENSIONS IN mm

**SIEMENS**

THIS DRAWING HAS BEEN PRODUCED USING AN EXAMPLE TEMPLATE PROVIDED BY SIEMENS PLM SOFTWARE

| | | | |
|---|---|---|---|
| FIRST ISSUED | 31.01.2019 | TITLE | |
| DRAWN BY | V.Detzel | | |
| CHECKED BY | Herr Böckle | | |
| APPROVED BY | Alfatraining | SIZE A0 | DWG NO. Baugruppe_DMotore_Stückliste_dwg |
| | | SHEET REV A | |
| | | SCALE 1:1 | SHEET 1 OF 1 |